SPH

Powerful. Precision. Reliable

- Servo Planetary Gearbox

Valued Gearbox Solution

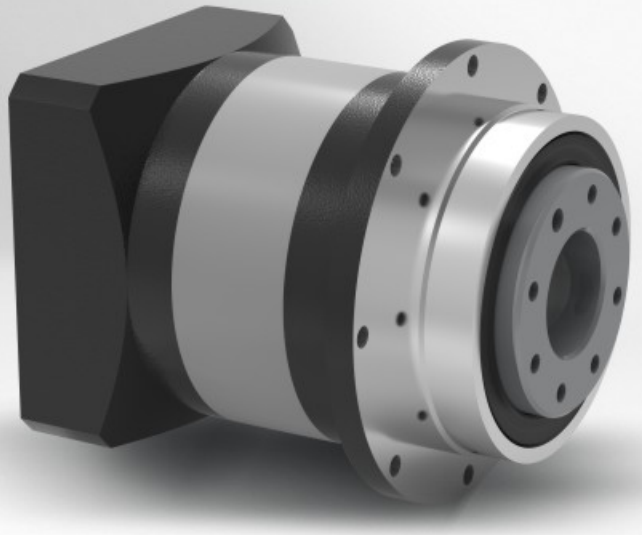

Helical Gear System Technology

Thanks to the tooth to tooth compact ratio more than 60%.The helical gearing and full needle bearing bring the benefits including higher torque capacity, smooth and lower noise running, decreased backlash and higher efficiency.

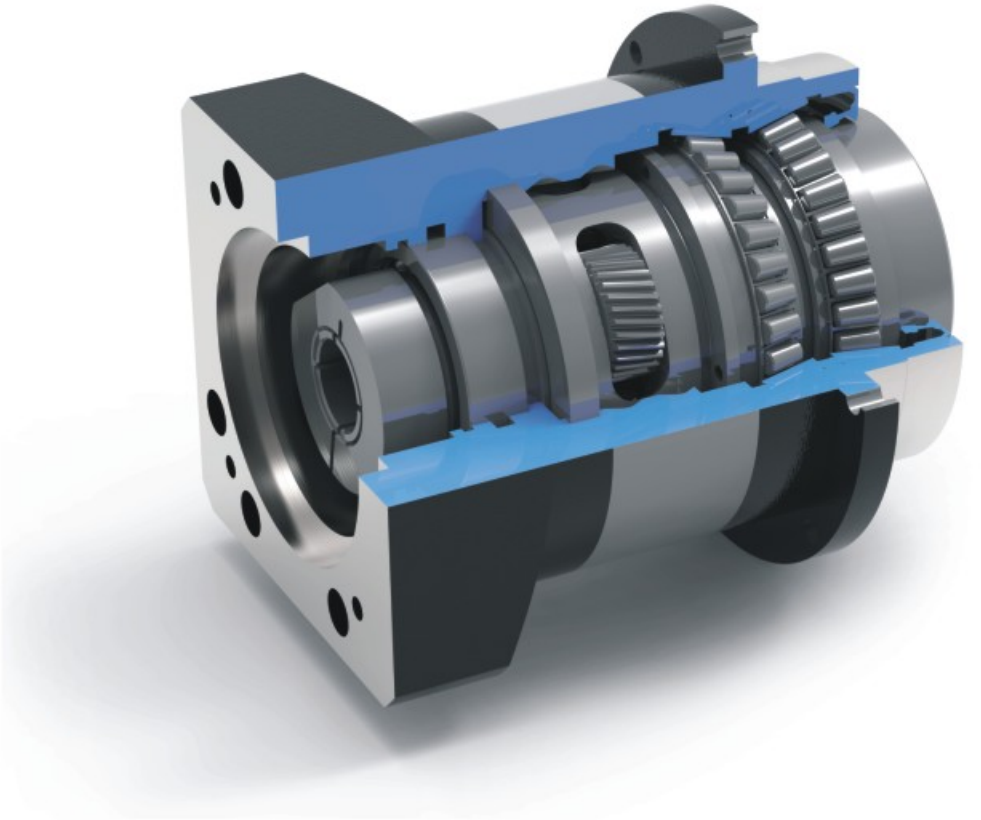

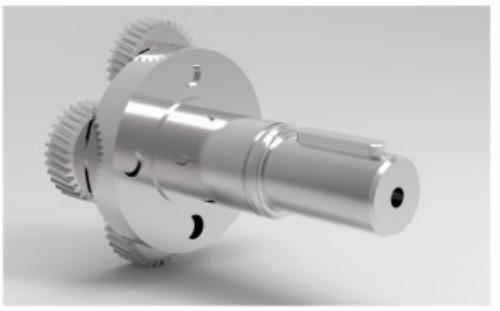

The Powerful Cantilever Planetary Carrier

The powerful cantilever planetary carrier provide great mechanical support for planetary gears, thus the complete gearbox can reach high level stability. Synthetic grease lubrication allows maintenance free for gearbox whole service life.

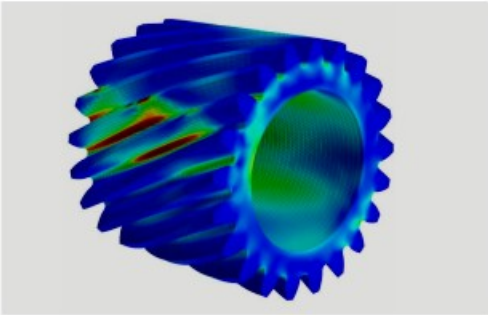

Gear Grinding and Heat Treatment Technology

The global leading gear grinding technology brings the great improvement for the tooth profile optimization, with the high level carburizing and quenching heat treatment technology to reach high precision and gear harden performance.

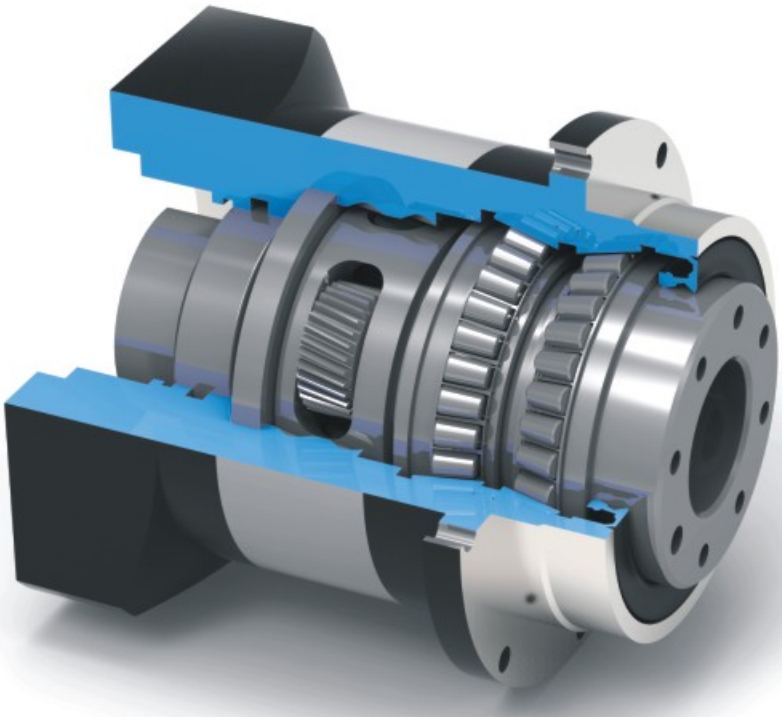

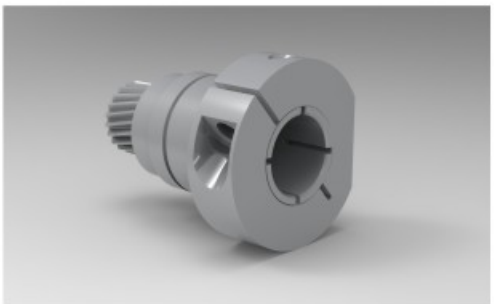

Dynamic Balance Clamping and Sealing System

For the gearbox input dynamic balance clamping design with perfect concentricity to decrease backlash and increase gearbox operation stability. The ultra sealing system offers grease leakage protection and support gearbox to reach IP65.

SPH070 1-stage

			1-stage							
Ratio	i		3	4	5	6	7	8	9	10
Nominal Output Torque		Nm	35	42	44	40	40	38	36	32
		in.lb	310	372	389	354	354	336	319	283
Emergency Stop Torque	T_{2Not}	Nm	70	84	88	80	80	76	72	64
		in.lb	620	743	779	708	708	673	637	566
Maximum Acceleration Torque	T_{2B}	Nm	63	75.6	79.2	72	72	68.4	64.8	57.6
		in.lb	558	669	701	637	637	605	574	510
Maximum Torque	T_{2M}	Nm	70	84	88	80	80	76	72	64
		in.lb	620	743	779	708	708	673	637	566
Permitted Average Input Speed	n_{1N}	rpm	4000							
Maximum Input Speed	n_{1Max}	rpm	6000							
Mean No Load Running Torque	T_{012}	Nm	0.3	0.27	0.25	0.25	0.25	0.25	0.25	0.25
		in.lb	2.66	2.39	2.21	2.21	2.21	2.21	2.21	2.21
Maximum Torsional Backlash	j_t	arcmin	≤ 8							
Torsional Rigidity	C_{t21}	Nm/arcmin	3	3	3	3	3	3	3	3
		in.lb/arcmin	26.55	26.55	26.55	26.55	26.55	26.55	26.55	26.55
Maximum Radial Load	F_{2ARMax}	N	2000							
		lb_f	449.60							
Maximum Axial Load	F_{2QMax}	N	1600							
		lb_f	359.68							
Max. Tilting Moment	M_{2KMax}	Nm	80							
		in.lb	708.06							
Mass Moment of Inertia	j_1	$kgcm^2$	0.135	0.093	0.078	0.070	0.069	0.065	0.065	0.065
Operating Noise Level	L_{PA}	dB(A)	< 58							
Efficiency at Full loading	η	%	97							
Operating Temperature		℃	- 25 to +90							
		F	−13 to +194							
Lubrication			Synthetic Lubrication Grease							
Mouting Position			Any Directions							
Protection Class			IP 65							
Service lifetime	L_h	h	20,000(Continuous Operation)							
Weight	m	kg	2							
		lb_m	4.41							

SPH070 2-stages

			2-stages							
Ratio	i		12	15	16	20	25	32	40	64
Nominal Output Torque		Nm	37	37	44	44	44	44	44	38
		in.lb	327	327	389	389	389	389	389	336
Emergency Stop Torque	T_{2Not}	Nm	74	74	88	88	88	88	88	76
		in.lb	655	655	779	779	779	779	779	673
Maximum Acceleration Torque	T_{2B}	Nm	66.6	66.6	79.2	79.2	79.2	79.2	79.2	68.4
		in.lb	589	589	701	701	701	701	701	605
Maximum Torque	T_{2u}	Nm	74	74	88	88	88	88	88	76
		in.lb	655	655	779	779	779	779	779	673
Permitted Average Input Speed	n_{1N}	rpm	4000							
Maximum Input Speed	n_{1Max}	rpm	6000							
Mean No Load Running Torque	T_{012}	Nm	0.27	0.25	0.27	0.25	0.25	0.25	0.25	0.25
		in.lb	2.39	2.21	2.39	2.21	2.21	2.21	2.21	2.21
Maximum Torsional Backlash	j_t	arcmin	≤ 10							
Torsional Rigidity	C_{t21}	Nm/arcmin	3	3	3	3	3	3	3	3
		in.lb/arcmin	26.55	26.55	26.55	26.55	26.55	26.55	26.55	26.55
Maximum Radial Load	F_{2AMax}	N	2000							
		lb_f	449.60							
Maximum Axial Load	F_{2QMax}	N	1600							
		lb_f	359.68							
Max. Tilting Moment	M_{2KMax}	Nm	80							
		in.lb	708.06							
Mass Moment of Inertia	j_1	$kgcm^2$	0.105	0.095	0.088	0.075	0.075	0.064	0.064	0.064
Operating Noise Level	L_{PA}	dB(A)	< 58							
Efficiency at Full loading	η	%	95							
Operating Temperature		℃	- 25 to +90							
		F	−13 to +194							
Lubrication			Synthetic Lubrication Grease							
Mouting Position			Any Directions							
Protection Class			IP 65							
Service lifetime	L_{h}	h	20,000(Continuous Operation)							
Weight	m	kg	2.5							
		lb_m	5.51							

SPH070 3-stages

			3-stages							
Ratio	i		80	100	125	160	200	256	320	512
Nominal Output Torque		Nm	45	45	45	45	45	45	45	38
		in.lb	398	398	398	398	398	398	398	336
Emergency Stop Torque	T_{2Not}	Nm	90	90	90	90	90	90	90	76
		in.lb	797	797	797	797	797	797	797	673
Maximum Acceleration Torque	T_{2B}	Nm	81	81	81	81	81	81	81	68.4
		in.lb	717	717	717	717	717	717	717	605
Maximum Torque	T_{2M}	Nm	90	90	90	90	90	90	90	76
		in.lb	797	797	797	797	797	797	797	673
Permitted Average Input Speed	n_{1N}	rpm	4000							
Maximum Input Speed	n_{1Max}	rpm	6000							
Mean No Load Running Torque	T_{012}	Nm	0.25	0.25	0.25	0.25	0.25	0.25	0.25	0.25
		in.lb	2.21	2.21	2.21	2.21	2.21	2.21	2.21	2.21
Maximum Torsional Backlash	j_t	arcmin	≤ 12							
Torsional Rigidity	C_{t21}	Nm/arcmin	3	3	3	3	3	3	3	3
		in.lb/arcmin	26.55	26.55	26.55	26.55	26.55	26.55	26.55	26.55
Maximum Radial Load	F_{2AMax}	N	2000							
		lb_f	449.60							
Maximum Axial Load	F_{2QMax}	N	1600							
		lb_f	359.68							
Max. Tilting Moment	M_{2KMax}	Nm	80							
		in.lb	708.06							
Mass Moment of Inertia	j_1	$kgcm^2$	0.075	0.064	0.064	0.064	0.064	0.064	0.064	0.064
Operating Noise Level	L_{PA}	dB(A)	< 58							
Efficiency at Full loading	η	%	93							
Operating Temperature		℃	- 25 to +90							
		F	−13 to +194							
Lubrication			Synthetic Lubrication Grease							
Mouting Position			Any Directions							
Protection Class			IP 65							
Service lifetime	L_h	h	20,000(Continuous Operation)							
Weight	m	kg	3							
		lb_m	6.61							

SPH090 1-stage

			1-stage							
Ratio	i		3	4	5	6	7	8	9	10
Nominal Output Torque		Nm	100	110	115	105	100	95	90	81
		in.lb	885	974	1018	929	885	841	797	717
Emergency Stop Torque	T_{2Not}	Nm	200	220	230	210	200	190	180	162
		in.lb	1770	1947	2036	1859	1770	1682	1593	1434
Maximum Acceleration Torque	T_{2B}	Nm	180	198	207	189	180	171	162	145.8
		in.lb	1593	1752	1832	1673	1593	1513	1434	1290
Maximum Torque	T_{2u}	Nm	200	220	230	210	200	190	180	162
		in.lb	1770	1947	2036	1859	1770	1682	1593	1434
Permitted Average Input Speed	n_{1N}	rpm	3000							
Maximum Input Speed	n_{1Max}	rpm	6000							
Mean No Load Running Torque	T_{012}	Nm	0.46	0.41	0.39	0.35	0.35	0.35	0.35	0.35
		in.lb	4.07	3.63	3.45	3.10	3.10	3.10	3.10	3.10
Maximum Torsional Backlash	j_t	arcmin	≤ 8							
Torsional Rigidity	C_{t21}	Nm/arcmin	4.8	4.8	4.8	4.8	4.8	4.8	4.8	4.8
		in.lb/arcmin	42.48	42.48	42.48	42.48	42.48	42.48	42.48	42.48
Maximum Radial Load	F_{2AMax}	N	4000							
		lb_f	899.20							
Maximum Axial Load	F_{2QMax}	N	3000							
		lb_f	674.40							
Max. Tilting Moment	M_{2KMax}	Nm	200							
		in.lb	1770.14							
Mass Moment of Inertia	j_1	$kgcm^2$	0.770	0.520	0.450	0.420	0.400	0.390	0.390	0.390
Operating Noise Level	L_{PA}	dB(A)	< 60							
Efficiency at Full loading	η	%	97							
Operating Temperature		℃	- 25 to +90							
		F	−13 to +194							
Lubrication			Synthetic Lubrication Grease							
Mouting Position			Any Directions							
Protection Class			IP 65							
Service lifetime	L_h	h	20,000(Continuous Operation)							
Weight	m	kg	5.5							
		lb_m	12.13							

SPH090 2-stages

			2-stages							
Ratio	i		12	15	16	20	25	32	40	64
Nominal Output Torque		Nm	100	100	110	110	110	110	110	95
		in.lb	885	885	974	974	974	974	974	841
Emergency Stop Torque	T_{2Not}	Nm	200	200	220	220	220	220	220	190
		in.lb	1770	1770	1947	1947	1947	1947	1947	1682
Maximum Acceleration Torque	T_{2B}	Nm	180	180	198	198	198	198	198	171
		in.lb	1593	1593	1752	1752	1752	1752	1752	1513
Maximum Torque	T_{2a}	Nm	200	200	220	220	220	220	220	190
		in.lb	1770	1770	1947	1947	1947	1947	1947	1682
Permitted Average Input Speed	n_{1N}	rpm	3000							
Maximum Input Speed	n_{1Max}	rpm	6000							
Mean No Load Running Torque	T_{012}	Nm	0.41	0.39	0.41	0.39	0.39	0.35	0.35	0.35
		in.lb	3.63	3.45	3.63	3.45	3.45	3.10	3.10	3.10
Maximum Torsional Backlash	j_t	arcmin	≤ 10							
Torsional Rigidity	C_{t21}	Nm/arcmin	4.8	4.8	4.8	4.8	4.8	4.8	4.8	4.8
		in.lb/arcmin	42.48	42.48	42.48	42.48	42.48	42.48	42.48	42.48
Maximum Radial Load	F_{2AMax}	N	4000							
		lb_f	899.20							
Maximum Axial Load	F_{2QMax}	N	3000							
		lb_f	674.40							
Max. Tilting Moment	M_{2KMax}	Nm	200							
		in.lb	1770.14							
Mass Moment of Inertia	j_1	$kgcm^2$	0.670	0.510	0.500	0.440	0.440	0.390	0.390	0.390
Operating Noise Level	L_{PA}	dB(A)	< 60							
Efficiency at Full loading	η	%	95							
Operating Temperature		℃	- 25 to +90							
		F	−13 to +194							
Lubrication			Synthetic Lubrication Grease							
Mouting Position			Any Directions							
Protection Class			IP 65							
Service lifetime	L_h	h	20,000(Continuous Operation)							
Weight	m	kg	6.5							
		lb_m	14.33							

SPH090 3-stages

			3-stages							
Ratio	i		80	100	125	160	200	256	320	512
Nominal Output Torque		Nm	120	120	120	120	120	120	120	95
		in.lb	1062	1062	1062	1062	1062	1062	1062	841
Emergency Stop Torque	T_{2Not}	Nm	240	240	240	240	240	240	240	190
		in.lb	2124	2124	2124	2124	2124	2124	2124	1682
Maximum Acceleration Torque	T_{2B}	Nm	216	216	216	216	216	216	216	171
		in.lb	1912	1912	1912	1912	1912	1912	1912	1513
Maximum Torque	T_{2a}	Nm	240	240	240	240	240	240	240	190
		in.lb	2124	2124	2124	2124	2124	2124	2124	1682
Permitted Average Input Speed	n_{1N}	rpm	3000							
Maximum Input Speed	n_{1Max}	rpm	6000							
Mean No Load Running Torque	T_{012}	Nm	0.39	0.39	0.39	0.35	0.35	0.35	0.35	0.35
		in.lb	3.45	3.45	3.45	3.10	3.10	3.10	3.10	3.10
Maximum Torsional Backlash	j_t	arcmin	≤ 12							
Torsional Rigidity	C_{t21}	Nm/arcmin	4.8	4.8	4.8	4.8	4.8	4.8	4.8	4.8
		in.lb/arcmin	42.48	42.48	42.48	42.48	42.48	42.48	42.48	42.48
Maximum Radial Load	F_{2AMax}	N	4000							
		lb_f	899.20							
Maximum Axial Load	F_{2QMax}	N	3000							
		lb_f	674.40							
Max. Tilting Moment	M_{2KMax}	Nm	200							
		in.lb	1770.14							
Mass Moment of Inertia	j_1	$kgcm^2$	0.500	0.440	0.700	0.390	0.390	0.390	0.390	0.390
Operating Noise Level	L_{PA}	dB(A)	< 60							
Efficiency at Full loading	η	%	93							
Operating Temperature		℃	- 25 to +90							
		F	−13 to +194							
Lubrication			Synthetic Lubrication Grease							
Mouting Position			Any Directions							
Protection Class			IP 65							
Service lifetime	L_h	h	20,000(Continuous Operation)							
Weight	m	kg	7.5							
		lb_m	16.53							

SPH120 1-stage

			1-stage							
Ratio	i		3	4	5	6	7	8	9	10
Nominal Output Torque		Nm	190	240	245	240	235	210	200	196
		in.lb	1682	2124	2168	2124	2080	1859	1770	1735
Emergency Stop Torque	T_{2Not}	Nm	380	480	490	480	470	420	400	392
		in.lb	3363	4248	4337	4248	4160	3717	3540	3469
Maximum Acceleration Torque	T_{2B}	Nm	342	432	441	432	423	378	360	352.8
		in.lb	3027	3824	3903	3824	3744	3346	3186	3123
Maximum Torque	T_{2M}	Nm	380	480	490	480	470	420	400	392
		in.lb	3363	4248	4337	4248	4160	3717	3540	3469
Permitted Average Input Speed	n_{1N}	rpm	3000							
Maximum Input Speed	n_{1Max}	rpm	6000							
Mean No Load Running Torque	T_{012}	Nm	1.05	0.95	0.91	0.88	0.88	0.88	0.88	0.88
		in.lb	9.29	8.41	8.05	7.79	7.79	7.79	7.79	7.79
Maximum Torsional Backlash	j_t	arcmin	≤ 8							
Torsional Rigidity	C_{t21}	Nm/arcmin	10	10	10	10	10	10	10	10
		in.lb/arcmin	88.51	88.51	88.51	88.51	88.51	88.51	88.51	88.51
Maximum Radial Load	F_{2AMax}	N	7800							
		lb_f	1753.44							
Maximum Axial Load	F_{2QMax}	N	7000							
		lb_f	1573.60							
Max. Tilting Moment	M_{2KMax}	Nm	400							
		in.lb	3540.28							
Mass Moment of Inertia	j_1	$kgcm^2$	2.630	1.790	1.530	1.500	1.400	1.320	1.320	1.320
Operating Noise Level	L_{PA}	dB(A)	< 62							
Efficiency at Full loading	η	%	97							
Operating Temperature		℃	- 25 to +90							
		F	−13 to +194							
Lubrication			Synthetic Lubrication Grease							
Mouting Position			Any Directions							
Protection Class			IP 65							
Service lifetime	L_h	h	20,000(Continuous Operation)							
Weight	m	kg	10							
		lb_m	22.05							

SPH120 2-stages

			2-stages							
Ratio	i		12	15	16	20	25	32	40	64
Nominal Output Torque		Nm	210	210	230	230	255	255	250	210
		in.lb	1859	1859	2036	2036	2257	2257	2213	1859
Emergency Stop Torque	T_{2Not}	Nm	420	420	460	460	510	510	500	420
		in.lb	3717	3717	4071	4071	4514	4514	4425	3717
Maximum Acceleration Torque	T_{2B}	Nm	378	378	414	414	459	459	450	378
		in.lb	3346	3346	3664	3664	4062	4062	3983	3346
Maximum Torque	T_{2e}	Nm	420	420	460	460	510	510	500	420
		in.lb	3717	3717	4071	4071	4514	4514	4425	3717
Permitted Average Input Speed	n_{1N}	rpm	3000							
Maximum Input Speed	n_{1Max}	rpm	6000							
Mean No Load Running Torque	T_{012}	Nm	0.95	0.91	0.95	0.91	0.91	0.88	0.88	0.88
		in.lb	8.41	8.05	8.41	8.05	8.05	7.79	7.79	7.79
Maximum Torsional Backlash	j_t	arcmin	≤ 10							
Torsional Rigidity	C_{t21}	Nm/arcmin	10	10	10	10	10	10	10	10
		in.lb/arcmin	88.51	88.51	88.51	88.51	88.51	88.51	88.51	88.51
Maximum Radial Load	F_{2AMax}	N	7800							
		lb_f	1753.44							
Maximum Axial Load	F_{2QMax}	N	7000							
		lb_f	1573.60							
Max. Tilting Moment	M_{2KMax}	Nm	400							
		in.lb	3540.28							
Mass Moment of Inertia	j_1	$kgcm^2$	1.630	1.670	1.750	1.530	1.490	1.320	1.320	1.320
Operating Noise Level	L_{PA}	dB(A)	< 62							
Efficiency at Full loading	η	%	95							
Operating Temperature		℃	- 25 to +90							
		F	−13 to +194							
Lubrication			Synthetic Lubrication Grease							
Mouting Position			Any Directions							
Protection Class			IP 65							
Service lifetime	L_h	h	20,000(Continuous Operation)							
Weight	m	kg	12.5							
		lb_m	27.56							

SPH120 3-stages

			3-stages							
Ratio	i		80	100	125	160	200	256	320	512
Nominal Output Torque		Nm	255	255	255	255	255	255	255	210
		in.lb	2257	2257	2257	2257	2257	2257	2257	1859
Emergency Stop Torque	T_{2Not}	Nm	510	510	510	510	510	510	510	420
		in.lb	4514	4514	4514	4514	4514	4514	4514	3717
Maximum Acceleration Torque	T_{2B}	Nm	459	459	459	459	459	459	459	378
		in.lb	4062	4062	4062	4062	4062	4062	4062	3346
Maximum Torque	T_{2M}	Nm	510	510	510	510	510	510	510	420
		in.lb	4514	4514	4514	4514	4514	4514	4514	3717
Permitted Average Input Speed	n_{1N}	rpm	3000							
Maximum Input Speed	n_{1Max}	rpm	6000							
Mean No Load Running Torque	T_{012}	Nm	0.91	0.91	0.91	0.88	0.88	0.88	0.88	0.88
		in.lb	8.05	8.05	8.05	7.79	7.79	7.79	7.79	7.79
Maximum Torsional Backlash	j_t	arcmin	≤ 12							
Torsional Rigidity	C_{t21}	Nm/arcmin	10	10	10	10	10	10	10	10
		in.lb/arcmin	88.51	88.51	88.51	88.51	88.51	88.51	88.51	88.51
Maximum Radial Load	F_{2RMax}	N	7800							
		lb_f	1753.44							
Maximum Axial Load	F_{2QMax}	N	7000							
		lb_f	1573.60							
Max. Tilting Moment	M_{2KMax}	Nm	400							
		in.lb	3540.28							
Mass Moment of Inertia	j_1	$kgcm^2$	1.530	1.490	2.570	1.300	1.300	1.300	1.300	1.300
Operating Noise Level	L_{PA}	dB(A)	< 62							
Efficiency at Full loading	η	%	93							
Operating Temperature		℃	- 25 to +90							
		F	−13 to +194							
Lubrication			Synthetic Lubrication Grease							
Mouting Position			Any Directions							
Protection Class			IP 65							
Service lifetime	L_h	h	20,000(Continuous Operation)							
Weight	m	kg	15.3							
		lb_m	33.73							

SPH160 1-stage

			1-stage							
Ratio	i		3	4	5	6	7	8	9	10
Nominal Output Torque		Nm	440	544	585	500	480	450	415	400
		in.lb	3894	4815	5178	4425	4248	3983	3673	3540
Emergency Stop Torque	T_{2Not}	Nm	880	1088	1170	1000	960	900	830	800
		in.lb	7789	9630	10355	8851	8497	7966	7346	7081
Maximum Acceleration Torque	T_{2B}	Nm	792	979.2	1053	900	864	810	747	720
		in.lb	7010	8667	9320	7966	7647	7169	6611	6373
Maximum Torque	T_{2e}	Nm	880	1088	1170	1000	960	900	830	800
		in.lb	7789	9630	10355	8851	8497	7966	7346	7081
Permitted Average Input Speed	n_{1N}	rpm	3000							
Maximum Input Speed	n_{1Max}	rpm	6000							
Mean No Load Running Torque	T_{012}	Nm	2.6	2.5	2.4	2.4	2.4	2.4	2.4	2.4
		in.lb	23.01	22.13	21.24	21.24	21.24	21.24	21.24	21.24
Maximum Torsional Backlash	j_t	arcmin	≤ 8							
Torsional Rigidity	C_{t21}	Nm/arcmin	28.7	28.7	28.7	28.7	28.7	28.7	28.7	28.7
		in.lb/arcmin	254.02	254.02	254.02	254.02	254.02	254.02	254.02	254.02
Maximum Radial Load	F_{2AMax}	N	10000							
		lb_f	2248.00							
Maximum Axial Load	F_{2QMax}	N	8000							
		lb_f	1798.40							
Max. Tilting Moment	M_{2KMax}	Nm	850							
		in.lb	7523.10							
Mass Moment of Inertia	j_1	$kgcm^2$	12.100	7.750	6.000	5.520	5.100	3.740	3.620	3.620
Operating Noise Level	L_{PA}	dB(A)	< 68							
Efficiency at Full loading	η	%	97							
Operating Temperature		℃	- 25 to +90							
		F	−13 to +194							
Lubrication			Synthetic Lubrication Grease							
Mouting Position			Any Directions							
Protection Class			IP 65							
Service lifetime	L_h	h	20,000(Continuous Operation)							
Weight	m	kg	22							
		lb_m	48.50							

SPH160 2-stages

			2-stages							
Ratio	i		12	15	16	20	25	32	40	64
Nominal Output Torque		Nm	450	450	450	564	608	608	608	450
		in.lb	3983	3983	3983	4992	5381	5381	5381	3983
Emergency Stop Torque	T_{2Not}	*Nm*	900	900	900	1128	1216	1216	1216	900
		in.lb	7966	7966	7966	9984	10762	10762	10762	7966
Maximum Acceleration Torque	T_{2B}	*Nm*	810	810	810	1015.2	1094.4	1094.4	1094.4	810
		in.lb	7169	7169	7169	8985	9686	9686	9686	7169
Maximum Torque	T_{2M}	*Nm*	900	900	900	1128	1216	1216	1216	900
		in.lb	7966	7966	7966	9984	10762	10762	10762	7966
Permitted Average Input Speed	n_{1N}	*rpm*	3000							
Maximum Input Speed	n_{1Max}	*rpm*	6000							
Mean No Load Running Torque	T_{012}	*Nm*	2.5	2.4	2.5	2.4	2.4	2.4	2.4	2.4
		in.lb	22.13	21.24	22.13	21.24	21.24	21.24	21.24	21.24
Maximum Torsional Backlash	j_t	arcmin	≤ 10							
Torsional Rigidity	C_{t21}	*Nm/arcmin*	28.7	28.7	28.7	28.7	28.7	28.7	28.7	28.7
		in.lb/arcmin	254.02	254.02	254.02	254.02	254.02	254.02	254.02	254.02
Maximum Radial Load	F_{2RMax}	*N*	10000							
		lb_f	2248.00							
Maximum Axial Load	F_{2QMax}	*N*	8000							
		lb_f	1798.40							
Max. Tilting Moment	M_{2KMax}	*Nm*	850							
		in.lb	7523.10							
Mass Moment of Inertia	j_1	$kgcm^2$	10.100	8.100	7.470	6.650	5.810	6.340	5.360	4.080
Operating Noise Level	L_{PA}	dB(A)	< 68							
Efficiency at Full loading	η	%	95							
Operating Temperature		℃	- 25 to +90							
		F	−13 to +194							
Lubrication			Synthetic Lubrication Grease							
Mouting Position			Any Directions							
Protection Class			IP 65							
Service lifetime	L_h	h	20,000(Continuous Operation)							
Weight	*m*	kg	25							
		lb_m	55.12							

SPH160 3-stages

			3-stages							
Ratio	i		80	100	125	160	200	256	320	512
Nominal Output Torque		Nm	580	580	580	580	608	608	580	450
		in.lb	5133	5133	5133	5133	5381	5381	5133	3983
Emergency Stop Torque	T_{2Not}	Nm	1160	1160	1160	1160	1216	1216	1160	900
		in.lb	10267	10267	10267	10267	10762	10762	10267	7966
Maximum Acceleration Torque	T_{2B}	Nm	1044	1044	1044	1044	1094.4	1094.4	1044	810
		in.lb	9240	9240	9240	9240	9686	9686	9240	7169
Maximum Torque	T_{2u}	Nm	1160	1160	1160	1160	1216	1216	1160	900
		in.lb	10267	10267	10267	10267	10762	10762	10267	7966
Permitted Average Input Speed	n_{1N}	rpm	3000							
Maximum Input Speed	n_{1Max}	rpm	6000							
Mean No Load Running Torque	T_{012}	Nm	2.4	2.4	2.4	2.4	2.4	2.4	2.4	2.4
		in.lb	21.24	21.24	21.24	21.24	21.24	21.24	21.24	21.24
Maximum Torsional Backlash	j_t	arcmin	≤ 12							
Torsional Rigidity	C_{t21}	Nm/arcmin	28.7	28.7	28.7	28.7	28.7	28.7	28.7	28.7
		in.lb/arcmin	254.02	254.02	254.02	254.02	254.02	254.02	254.02	254.02
Maximum Radial Load	F_{2AMax}	N	10000							
		lb_f	2248.00							
Maximum Axial Load	F_{2QMax}	N	8000							
		lb_f	1798.40							
Max. Tilting Moment	M_{2KMax}	Nm	850							
		in.lb	7523.10							
Mass Moment of Inertia	j_1	$kgcm^2$	7.400	7.300	7.300	6.500	6.500	6.500	6.500	6.500
Operating Noise Level	L_{PA}	dB(A)	< 68							
Efficiency at Full loading	η	%	93							
Operating Temperature		℃	- 25 to +90							
		F	−13 to +194							
Lubrication			Synthetic Lubrication Grease							
Mouting Position			Any Directions							
Protection Class			IP 65							
Service lifetime	L_h	h	20,000(Continuous Operation)							
Weight	m	kg	28							
		lb_m	61.73							

SPH205 1-stage

			1-stage							
Ratio	i		3	4	5	6	7	8	9	10
Nominal Output Torque		Nm	600	1050	1000	800	800	800	710	710
		in.lb	5310	9293	8851	7081	7081	7081	6284	6284
Emergency Stop Torque	T_{2Not}	Nm	1200	2100	2000	1600	1600	1600	1420	1420
		in.lb	10621	18586	17701	14161	14161	14161	12568	12568
Maximum Acceleration Torque	T_{2B}	Nm	1080	1890	1800	1440	1440	1440	1278	1278
		in.lb	9559	16728	15931	12745	12745	12745	11311	11311
Maximum Torque	T_{2a}	Nm	1200	2100	2000	1600	1600	1600	1420	1420
		in.lb	10621	18586	17701	14161	14161	14161	12568	12568
Permitted Average Input Speed	n_{1N}	rpm	2000							
Maximum Input Speed	n_{1Max}	rpm	4000							
Mean No Load Running Torque	T_{012}	Nm	3.5	3.4	3.2	3.2	3.2	3.2	3.2	3.2
		in.lb	30.98	30.09	28.32	28.32	28.32	28.32	28.32	28.32
Maximum Torsional Backlash	j_t	arcmin	≤ 8							
Torsional Rigidity	C_{t21}	Nm/arcmin	120	120	120	120	120	120	120	120
		in.lb/arcmin	1062.08	1062.08	1062.08	1062.08	1062.08	1062.08	1062.08	1062.08
Maximum Radial Load	F_{2AMax}	N	16000							
		lb_f	3596.80							
Maximum Axial Load	F_{2QMax}	N	13000							
		lb_f	2922.40							
Max. Tilting Moment	M_{2KMax}	Nm	1280							
		in.lb	11328.90							
Mass Moment of Inertia	j_1	$kgcm^2$	28.980	23.670	22.750	22.480	22.480	22.590	22.590	22.550
Operating Noise Level	L_{PA}	dB(A)	< 70							
Efficiency at Full loading	η	%	97							
Operating Temperature		℃	- 25 to +90							
		F	−13 to +194							
Lubrication			Synthetic Lubrication Grease							
Mouting Position			Any Directions							
Protection Class			IP 65							
Service lifetime	L_h	h	20,000(Continuous Operation)							
Weight	m	kg	37							
		lb_m	81.57							

SPH205 2-stages

			2-stages							
Ratio	i		12	15	16	20	25	32	40	64
Nominal Output Torque		Nm	1050	650	1050	1000	1000	1050	1000	800
		in.lb	9293	5753	9293	8851	8851	9293	8851	7081
Emergency Stop Torque	T_{2Not}	Nm	2100	1300	2100	2000	2000	2100	2000	1600
		in.lb	18586	11506	18586	17701	17701	18586	17701	14161
Maximum Acceleration Torque	T_{2B}	Nm	1890	1170	1890	1800	1800	1890	1800	1440
		in.lb	16728	10355	16728	15931	15931	16728	15931	12745
Maximum Torque	T_{2u}	Nm	2100	1300	2100	2000	2000	2100	2000	1600
		in.lb	18586	11506	18586	17701	17701	18586	17701	14161
Permitted Average Input Speed	n_{1N}	rpm	2000							
Maximum Input Speed	n_{1Max}	rpm	4000							
Mean No Load Running Torque	T_{012}	Nm	3.4	3.2	3.4	3.2	3.2	3.2	3.2	3.2
		in.lb	30.09	28.32	30.09	28.32	28.32	28.32	28.32	28.32
Maximum Torsional Backlash	j_t	arcmin	≤ 10							
Torsional Rigidity	C_{t21}	Nm/arcmin	120	120	120	120	120	120	120	120
		in.lb/arcmin	1062.08	1062.08	1062.08	1062.08	1062.08	1062.08	1062.08	1062.08
Maximum Radial Load	F_{2ARMax}	N	16000							
		lb_f	3596.80							
Maximum Axial Load	F_{2QMax}	N	13000							
		lb_f	2922.40							
Max. Tilting Moment	M_{2KMax}	Nm	1280							
		in.lb	11328.90							
Mass Moment of Inertia	j_1	$kgcm^2$	18.980	16.980	7.540	7.420	7.540	7.140	7.140	7.540
Operating Noise Level	L_{PA}	dB(A)	< 70							
Efficiency at Full loading	η	%	95							
Operating Temperature		℃	- 25 to +90							
		F	−13 to +194							
Lubrication			Synthetic Lubrication Grease							
Mouting Position			Any Directions							
Protection Class			IP 65							
Service lifetime	L_{h}	h	20,000(Continuous Operation)							
Weight	m	kg	42							
		lb_m	92.59							

SPH205 3-stages

			3-stages							
Ratio	i		80	100	125	160	200	256	320	512
Nominal Output Torque		Nm	1000	1000	1000	1000	1000	1000	1000	800
		in.lb	8851	8851	8851	8851	8851	8851	8851	7081
Emergency Stop Torque	T_{2Not}	*Nm*	2000	2000	2000	2000	2000	2000	2000	1600
		in.lb	17701	17701	17701	17701	17701	17701	17701	14161
Maximum Acceleration Torque	T_{2B}	*Nm*	1800	1800	1800	1800	1800	1800	1800	1440
		in.lb	15931	15931	15931	15931	15931	15931	15931	12745
Maximum Torque	T_{2M}	*Nm*	2000	2000	2000	2000	2000	2000	2000	1600
		in.lb	17701	17701	17701	17701	17701	17701	17701	14161
Permitted Average Input Speed	n_{1N}	*rpm*	2000							
Maximum Input Speed	n_{1Max}	*rpm*	4000							
Mean No Load Running Torque	T_{012}	*Nm*	3.2	3.2	3.2	3.2	3.2	3.2	3.2	3.2
		in.lb	28.32	28.32	28.32	28.32	28.32	28.32	28.32	28.32
Maximum Torsional Backlash	j_t	arcmin	≤ 12							
Torsional Rigidity	C_{t21}	*Nm/arcmin*	120	120	120	120	120	120	120	120
		in.lb/arcmin	1062.08	1062.08	1062.08	1062.08	1062.08	1062.08	1062.08	1062.08
Maximum Radial Load	F_{2AMax}	*N*	16000							
		lb_f	3596.80							
Maximum Axial Load	F_{2QMax}	*N*	13000							
		lb_f	2922.40							
Max. Tilting Moment	M_{2KMax}	*Nm*	1280							
		in.lb	11328.90							
Mass Moment of Inertia	j_1	$kgcm^2$	7.540	7.420	7.420	7.140	7.140	7.140	7.140	7.140
Operating Noise Level	L_{PA}	dB(A)	< 70							
Efficiency at Full loading	η	%	93							
Operating Temperature		℃	- 25 to +90							
		F	−13 to +194							
Lubrication			Synthetic Lubrication Grease							
Mouting Position			Any Directions							
Protection Class			IP 65							
Service lifetime	L_h	h	20,000(Continuous Operation)							
Weight	*m*	kg	48							
		lb_m	105.82							

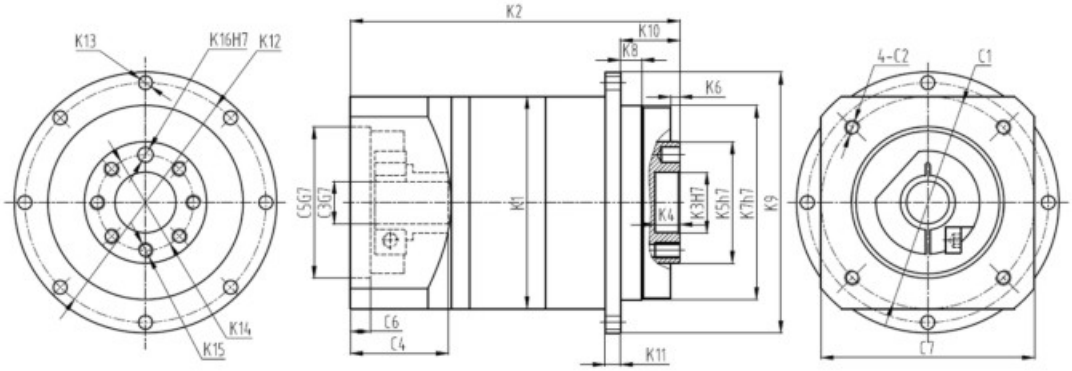

Model	SPH070			SPH090			SPH120			SPH160			SPH205		
Stage	1	2	3	1	2	3	1	2	3	1	2	3	1	2	3
K1	Φ70			Φ97			Φ193.2			Φ160			Φ210		
	Φ2.76			Φ3.82			Φ7.61			Φ6.30			Φ8.27		
K2	88	111.7	135.4	120	148.5	179.8	141	185	203	196	257	318	235	297	358
	3.47	4.40	5.33	4.73	5.85	7.08	5.56	7.29	8.00	7.72	10.13	12.53	9.26	11.70	14.11
K3	Φ20			Φ31.5			Φ40			Φ50			Φ80		
	Φ0.79			Φ1.24			Φ1.58			Φ1.97			Φ3.15		
K4	8			12			12			12			22.5		
	0.32			0.47			0.47			0.47			0.89		
K5	Φ40			Φ63			Φ80			Φ100			Φ160		
	Φ1.58			Φ2.48			Φ3.15			Φ3.94			Φ6.30		
K6	3			6			6			6			6		
	0.12			0.24			0.24			0.24			0.24		
K7	Φ64			Φ90			Φ110			Φ140			Φ200		
	Φ2.52			Φ3.55			Φ4.33			Φ5.52			Φ7.88		
K8	7			10			10			14.6			15		
	0.28			0.39			0.39			0.58			0.59		
K9	Φ86			Φ118			Φ145			Φ179			Φ247		
	Φ3.39			Φ4.65			Φ5.71			Φ7.05			Φ9.73		
K10	19.5			30			29			38			56		
	0.77			1.18			1.14			1.50			2.21		
K11	5			8			10			10			12		
	0.20			0.32			0.39			0.39			0.47		
K12	Φ79			Φ109			Φ135			Φ168			Φ233		
	Φ3.11			Φ4.30			Φ5.32			Φ6.62			Φ9.18		
K13	8-Φ4.5			8-Φ5.5			8-Φ5.5			12-Φ6.6			12-Φ9		
K14	Φ31.5			Φ50			Φ63			Φ80			Φ125		
	Φ1.24			Φ1.97			Φ2.48			Φ3.15			Φ4.93		
K15	7-M5X8			7-M6X12			11-M6X15			11-M8X18			11-M10X17		
K16	Φ5X6			Φ6X7			Φ6X7			Φ8X8			Φ10X10		
C1	Φ70			Φ90			Φ145		Φ90	Φ200		Φ145	Φ215	Φ200	
	Φ2.76			Φ3.54			Φ5.71		Φ3.55	Φ7.87		Φ5.71	Φ8.46	Φ7.87	
C2	M5X12			M6X15			M8X20		M6X15	M12X25		M8X20	M12X25	M12X25	
C3	Φ14			Φ19			Φ24		Φ19	Φ35		Φ24	Φ42	Φ35	
	Φ0.55			Φ0.75			Φ0.94		Φ0.75	Φ1.38		Φ0.94	Φ1.65	Φ1.38	
C4	32.1			41.6			61.3		41.6	82		61.3	82.5	82	
	1.26			1.64			2.42		1.64	3.23		2.42	3.25	3.23	
C5	Φ50			Φ70			Φ110		Φ70	Φ114.3		Φ110	Φ180	Φ114.3	
	Φ1.97			Φ2.76			Φ4.33		Φ2.76	Φ4.5		Φ4.33	Φ7.09	Φ4.5	
C6	6.5			6.5			8		6.5	8		8	8	8	
	0.26			0.26			0.32		0.26	0.32		0.32	0.32	0.32	
C7	70			97			120		89	175		120	190	175	
	2.76			3.82			4.73		3.51	6.90		4.73	7.49	6.90	

The dimensions modified as per the applied motor flanges.
You can get the specific gearbox drawing solution by KDP(Kofon Design Programme) on line from our website: www.kofon-motion.com

Technical Memo